CHILD CARE ASSISTANCE PROGRAM
Division of Public Assistance
Child Care Program Office
http://dhss.alaska.gov/dpa/Pages/ccare

Office Use Only

Approved Child Care Provider
Disaster Preparedness and Emergency Evacuation Plan

An Approved Child Care Provider must have a disaster preparedness and emergency evacuation plan that includes evacuation procedures that will ensure the complete evacuation of children in care, including children with limited mobility, within 150 seconds (2 ½ minutes). Documentation of monthly evacuation drills conducted must be maintained for three years and provided to the Department upon request. For further information, refer to 7AAC 41.222. For additional emergency preparedness resources please see http://dhss.alaska.gov/dpa/Pages/ccare/default.aspx

Your Emergency Plan requires both a floor plan mapping your evacuation routes and a written plan describing the procedures you will follow when evacuating your child care premises.

Your floor plan must include identification of:

- Smoke detectors, fire extinguishers, and carbon monoxide detectors;
- Escape routes from every room with doors and windows clearly marked **for each level of your child care; and**
- Specified meeting place outside your child care.

Your written plan must describe the procedures you will follow which include:

- For the complete evacuation of the child care and explain your plan to evacuate everyone within 150 seconds, **including children under 30 months of age, children with limited mobility**, **and children who otherwise may need assistance in an emergency**, **including a child who is mentally, visually, or hearing impaired;**
- For emergency situations or natural disasters that may affect the child care, including, as appropriate, fire, tsunami/ flooding, and earthquake emergencies;
- The relocation site and plan to reunify children with their parents in the event of the need to relocate due to an evacuation;
- Conducting and recording monthly emergency evacuations drills; and
- Location of the required first aid kit(s).

Fire Safety Tips:

1. Sleep with bedroom doors closed. They will hold back deadly smoke.
2. Teach everyone to recognize the sound of your smoke alarms and carbon monoxide detectors.
3. Touch doors before opening them. If hot, use your alternate escape route. If cool, brace your shoulder against the door and open it cautiously. Be ready to slam it if smoke or heat rush in.
4. Crawl low under smoke.
5. If your clothes catch on fire: stop, drop and roll.
6. Get out fast.
7. Don't go back inside once you're out.
8. Choose a specific meeting place so you can see that everyone is out of the house.
9. Call 911.
10. Practice evacuating your home every month at different times of the day so everyone knows how to get out quickly from all areas of the home.
11. Post your evacuation plan and discuss with children and parents.

Provider Name (First, Middle and Last): _____ Physical Address: _____

The location in which child care services will be provided is a ___ story structure. There are ____kitchen(s), ____ living rooms(s), ____ bedroom(s), ____bathroom(s), and ____ additional areas. In case of an emergency requiring the evacuation, the designated meeting site away from the child care is: _____. In case of evacuation, care will be provided and children reunified with their parents, at the designated reunification site: _____.

Your Floor Plan must identify each item listed. Each floor of the child care must be drawn separately:

1. Primary Exit (Door)
2. Secondary Exit (Door/Window)
3. Exterior Door(s)
4. Windows
5. Smoke detector(s)
6. Carbon monoxide detector(s)
7. Fire Extinguisher(s)
8. First Aid kit(s)
9. Kitchen(s)
10. Living Room(s)
11. Bedroom(s)
12. Safe meeting location outside of the child care facility (draw this outside of the home)

Draw your floor plan in this box or on a separate sheet.

Sample Floor Plan Evacuation routes
FE= Fire Extinguisher
SD= Smoke Detector
CM= Carbon Monoxide Detector
FA= First Aid Kit

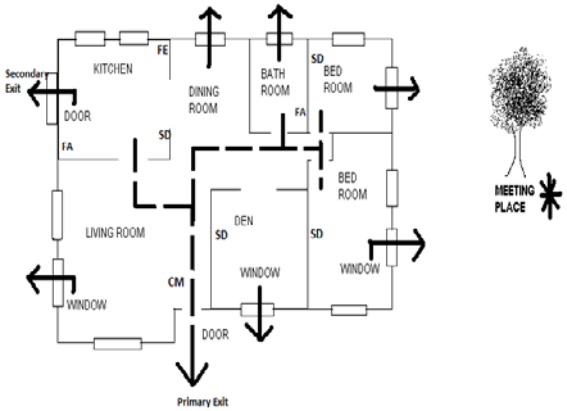

Provider Name (First, Middle, and Last): _____

Written Plan: Describe the procedures that will be followed for the complete evacuation of the child care and explain your plan to evacuate everyone within 150 seconds, **including children under 30 months of age, children with limited mobility**, **and children who otherwise may need assistance in an emergency**, **including a child who is mentally, visually, or hearing impaired.** The plan must also include procedures for emergency situations or natural disasters that may affect the child care location including fire; tsunami/flooding and earthquake emergencies; a relocation site to be used during the evacuation; and a plan to reunify children with their parents in the event the child care needs to be evacuated and relocated.

My child care has ___ exterior doors(s). My primary exit is the _____door. If exiting through this door is not possible my secondary exit of _____ will be used. A first aid kit and emergency contact information is taken with us in case of evacuation. To ensure that all children are quickly and safely evacuated from the child care location, the following plans will be used.

Fire or Carbon Monoxide:

1. I will quickly determine the quickest and safest exit route at the sight of fire, smell of smoke, or the sound of the smoke or carbon monoxide detector by:

_____

_____

_____

2. I will assist children who can walk to the exit by:

_____

_____

_____

3. I will assist children with limited mobility or who need extra assistance to the exit by:

_____

_____

_____

4. I will continue to keep the children safe and provide care at our designated meeting location, until able to return to the child care by:

_____

_____

_____

Provider Name (First, Middle, and Last): _____

5. I will continue to keep the children safe and provide care at our designated reunification site, if unable to return to the child care, and reunite children with their parents by:

_____

_____

_____

Tsunami/Flooding:

I will determine if/when evacuating the child care is necessary by monitoring weather conditions and updates by accessing the West Coast/Alaska Tsunami Warning Center website: http://wcatwc.arh.noaa.gov/ and/or listening/tuning in to television or radio station(s) _____.

1. If we are unable to leave the child care, I will take the children to the highest place within the child care which is: _____.

2. If necessary, and we are able to leave the child care, I will take the children to higher ground located at: _____.

3. I will assist children who can walk to exit or to higher ground by:

_____

_____

_____

4. I will assist children with limited mobility or who need extra assistance to the exit or to higher ground by:

_____

_____

_____

5. Once at our designated higher ground location or the highest place within the child care, I will continue to keep the children safe and provide care by:

_____

_____

_____

Provider Name (First, Middle and Last): _____

6. I will continue to keep the children safe and provide care at our designated reunification site, if unable to return to the child care, and reunite children with their parents by:

_____

_____

_____

Earthquake:

1. I will quickly determine the safest place for children to take cover by:

_____

_____

_____

2. Children will calmly but firmly be told to stop, cover and hold on by:

_____

_____

_____

3. I will assist children with limited mobility or who need extra assistance by:

_____

_____

_____

4. Once the earthquake has stopped, I will assess the children for any injury by:

_____

_____

_____

Provider Name (First, Middle, and Last): _____

5. I will assess the child care location for damages by:

_____
_____
_____

6. If damages to the child care require evacuation, I will relocate children to the designated reunification site by:

_____
_____
_____

7. I will continue to keep the children safe and provide care at our designated reunification site, if unable to return to the child care, and reunite children with their parents by:

_____
_____
_____

Shelter in Place.

Should an emergency occur making it unsafe to leave the child care location, I will conduct lock down procedures:

1. I will remain calm and follow all instructions given by police or other emergency responders.
2. I will ensure all windows and doors are securely closed and locked unless instructed otherwise by police or emergency responders.
3. I will notify the parents of children in care to not come to the child care until advised it is safe to do so.
4. I continue to keep the children safe and provide care at the child care.

Additional comments:

_____
_____
_____
_____
_____
_____